Cambridge International AS & A Level

Cambridge International Examinations
Cambridge International Advanced Subsidiary and Advanced Level

CANDIDATE NAME									
CENTRE NUMBER						CANDIDATE NUMBER			

2862677931

PHYSICS **9702/22**

Paper 2 AS Structured Questions **October/November 2014**

1 hour

Candidates answer on the Question Paper.

No Additional Materials are required.

READ THESE INSTRUCTIONS FIRST

Write your Centre number, candidate number and name on all the work you hand in.
Write in dark blue or black pen.
You may use an HB pencil for any diagrams or graphs.
Do not use staples, paper clips, glue or correction fluid.
DO **NOT** WRITE IN ANY BARCODES.

Answer **all** questions.

Electronic calculators may be used.
You may lose marks if you do not show your working or if you do not use appropriate units.

At the end of the examination, fasten all your work securely together.
The number of marks is given in brackets [ ] at the end of each question or part question.

This document consists of **14** printed pages and **2** blank pages.

© UCLES 2014

CAMBRIDGE International Examinations

Data

speed of light in free space, $c = 3.00 \times 10^{8}\ \text{m s}^{-1}$

permeability of free space, $\mu_0 = 4\pi \times 10^{-7}\ \text{H m}^{-1}$

permittivity of free space, $\varepsilon_0 = 8.85 \times 10^{-12}\ \text{F m}^{-1}$

$$\left(\frac{1}{4\pi\varepsilon_0} = 8.99 \cdot\ 10^{9}\ \text{m F}^{-1}\right)$$

elementary charge, $e = 1.60 \times 10^{-19}\ \text{C}$

the Planck constant, $h = 6.63 \times 10^{-34}\ \text{J s}$

unified atomic mass constant, $u = 1.66 \times 10^{-27}\ \text{kg}$

rest mass of electron, $m_e = 9.11 \times 10^{-31}\ \text{kg}$

rest mass of proton, $m_p = 1.67 \times 10^{-27}\ \text{kg}$

molar gas constant, $R = 8.31\ \text{J K}^{-1}\ \text{mol}^{-1}$

the Avogadro constant, $N_A = 6.02 \times 10^{23}\ \text{mol}^{-1}$

the Boltzmann constant, $k = 1.38 \times 10^{-23}\ \text{J K}^{-1}$

gravitational constant, $G = 6.67 \times 10^{-11}\ \text{N m}^2\ \text{kg}^{-2}$

acceleration of free fall, $g = 9.81\ \text{m s}^{-2}$

© UCLES 2014

Formulae

uniformly accelerated motion, $s = ut + \frac{1}{2}at^2$
$v^2 = u^2 + 2as$

work done on/by a gas, $W = p\Delta V$

gravitational potential, $\phi = -\frac{Gm}{r}$

hydrostatic pressure, $p = \rho gh$

pressure of an ideal gas, $p = \frac{1}{3}\frac{Nm}{V}\langle c^2 \rangle$

simple harmonic motion, $a = -\omega^2 x$

velocity of particle in s.h.m., $v = v_0 \cos \omega t$
$v = \pm \omega \sqrt{(x_0^2 - x^2)}$

electric potential, $V = \frac{Q}{4\pi\varepsilon_0 r}$

capacitors in series, $1/C = 1/C_1 + 1/C_2 + \ldots$

capacitors in parallel, $C = C_1 + C_2 + \ldots$

energy of charged capacitor, $W = \frac{1}{2}QV$

resistors in series, $R = R_1 + R_2 + \ldots$

resistors in parallel, $1/R = 1/R_1 + 1/R_2 + \ldots$

alternating current/voltage, $x = x_0 \sin \omega t$

radioactive decay, $x = x_0 \exp(-\lambda t)$

decay constant, $\lambda = \frac{0.693}{t_{\frac{1}{2}}}$

© UCLES 2014

[Turn over

Answer **all** the questions in the spaces provided.

1 **(a)** The Young modulus of the metal of a wire is 1.8×10^{11} Pa. The wire is extended and the strain produced is 8.2×10^{-4}.
Calculate the stress in GPa.

stress = ...GPa [2]

(b) An electromagnetic wave has frequency 12 THz.

(i) Calculate the wavelength in μm.

wavelength = ...μm [2]

(ii) State the name of the region of the electromagnetic spectrum for this frequency.

.....[1]

(c) An object B is on a horizontal surface. Two forces act on B in this horizontal plane. A vector diagram for these forces is shown to scale in Fig. 1.1.

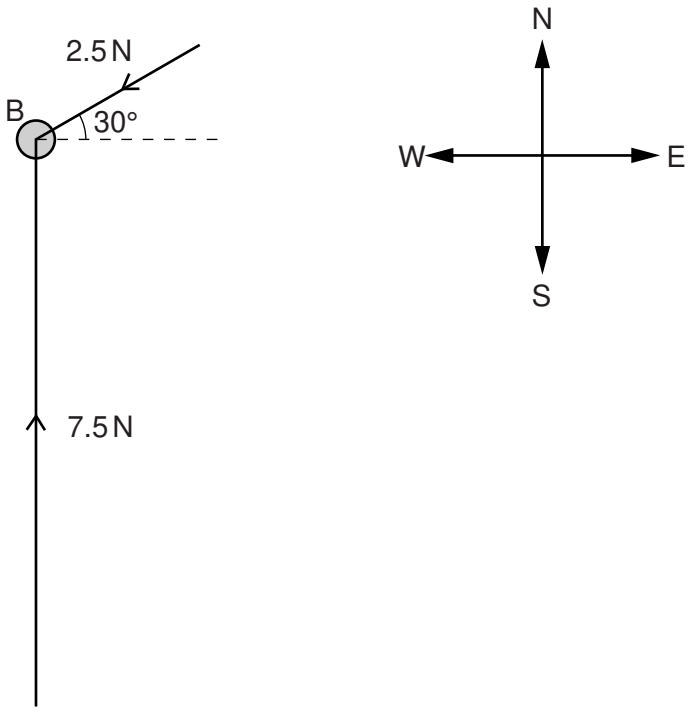

Fig. 1.1

© UCLES 2014

A force of 7.5 N towards north and a force of 2.5 N from 30° north of east act on B.
The mass of B is 750 g.

(i) On Fig. 1.1, draw an arrow to show the approximate direction of the resultant of these two forces. [1]

(ii) **1.** Show that the magnitude of the resultant force on B is 6.6 N.

[1]

2. Calculate the magnitude of the acceleration of B produced by this resultant force.

magnitude = ... $m\,s^{-2}$ [2]

(iii) Determine the angle between the direction of the acceleration and the direction of the 7.5 N force.

angle = ... ° [1]

2 A ball is thrown from A to B as shown in Fig. 2.1.

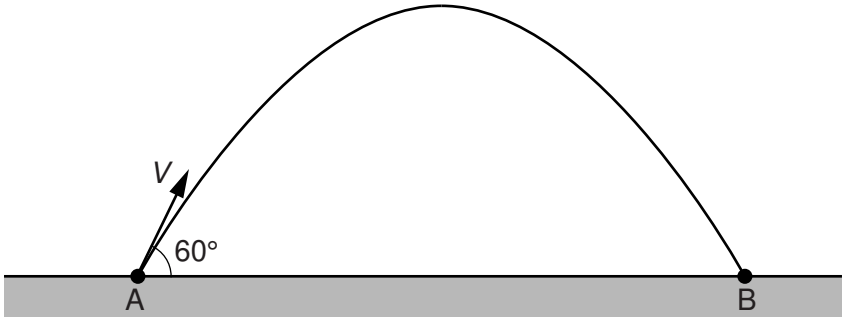

Fig. 2.1

The ball is thrown with an initial velocity V at 60° to the horizontal.
The variation with time t of the vertical component V_v of the velocity of the ball from $t = 0$ to $t = 0.60\,s$ is shown in Fig. 2.2.

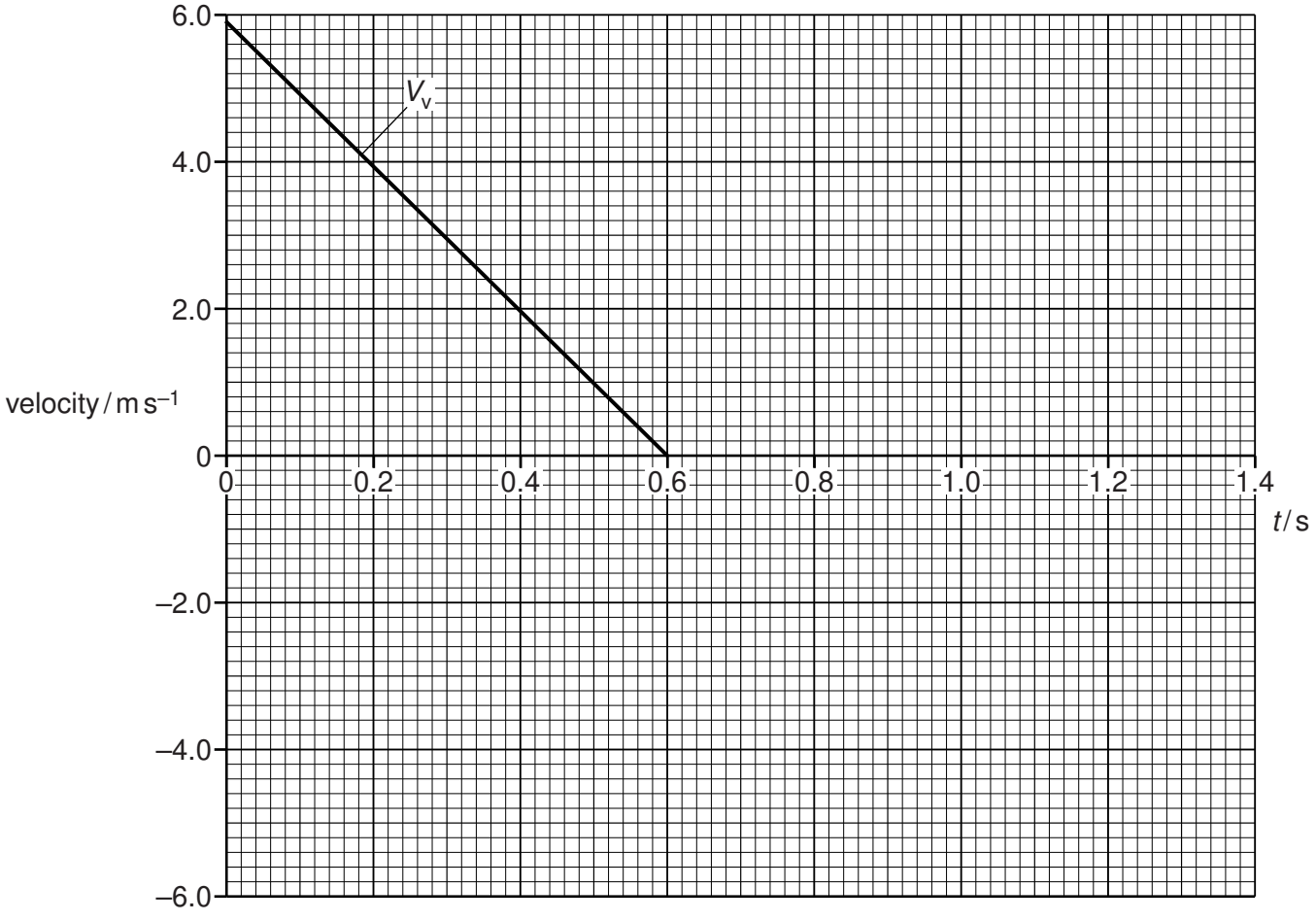

Fig. 2.2

Assume air resistance is negligible.

(a) **(i)** Complete Fig. 2.2 for the time until the ball reaches B. [2]

(ii) Calculate the maximum height reached by the ball.

height = ...m [2]

(iii) Calculate the horizontal component V_h of the velocity of the ball at time $t = 0$.

V_h = ... $m\,s^{-1}$ [2]

(iv) On Fig. 2.2, sketch the variation with t of V_h. **Label** this sketch V_h. [1]

(b) The ball has mass 0.65 kg.
Calculate, for the ball,

(i) the maximum kinetic energy,

maximum kinetic energy = ...J [3]

(ii) the maximum potential energy above the ground.

maximum potential energy = ...J [2]

3 **(a)** Define *electric field strength*.

.....

.....[1]

(b) A sphere S has radius 1.2×10^{-6} m and density 930 kg m^{-3}.

Show that the weight of S is 6.6×10^{-14} N.

[2]

(c) Two horizontal metal plates are 14 mm apart in a vacuum. A potential difference (p.d.) of 1.9 kV is applied across the plates, as shown in Fig. 3.1.

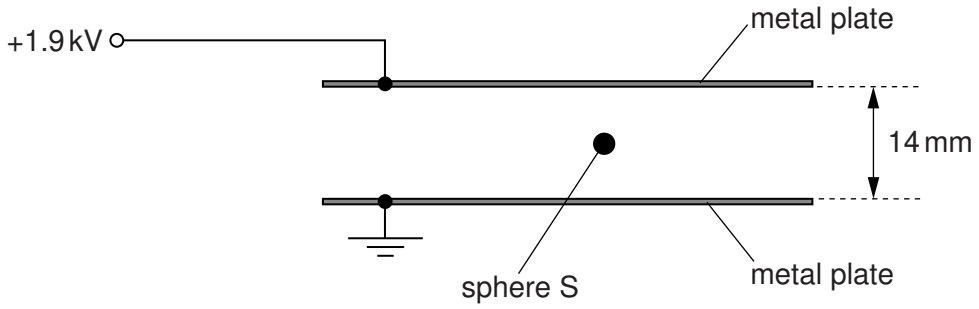

Fig. 3.1

A uniform electric field is produced between the plates.
The sphere S in **(b)** is charged and is held stationary between the plates by the electric field.

(i) Calculate the electric field strength between the plates.

electric field strength = ...V m^{-1} [2]

(ii) Calculate the magnitude of the charge on S.

charge = ... C [2]

(iii) The magnitude of the p.d. applied to the plates is increased.
Explain why S accelerates towards the top plate.

.....

.....[2]

© UCLES 2014

[Turn over

BLANK PAGE

© UCLES 2014

4 **(a)** Compare the molecular motion of a liquid with

(i) a solid,

.....

.....[2]

(ii) a gas.

.....

.....[1]

(b) **(i)** A ductile material in the form of a wire is stretched up to its breaking point. On Fig. 4.1, sketch the variation with extension x of the stretching force F.

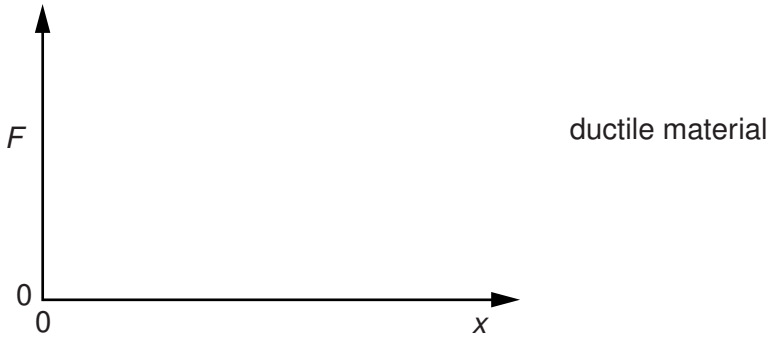

Fig. 4.1 [1]

(ii) On Fig. 4.2, sketch the variation with extension x of the stretching force F for a brittle material up to its breaking point.

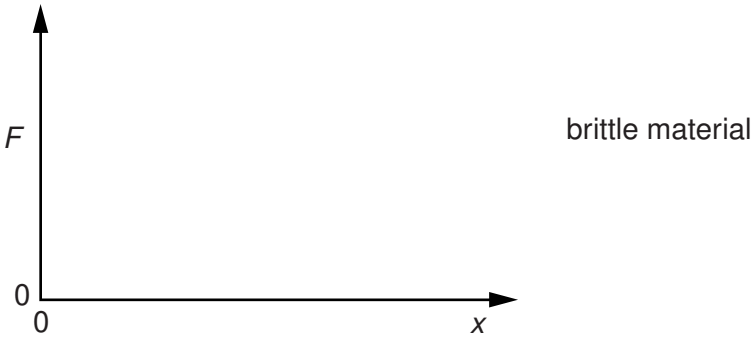

Fig. 4.2 [1]

(c) Describe a similarity and a difference between ductile and brittle materials.

similarity: .....

.....

difference: .....

.....

[2]

5 A battery of electromotive force (e.m.f.) 12 V and internal resistance *r* is connected in series to two resistors, each of constant resistance *X*, as shown in Fig. 5.1.

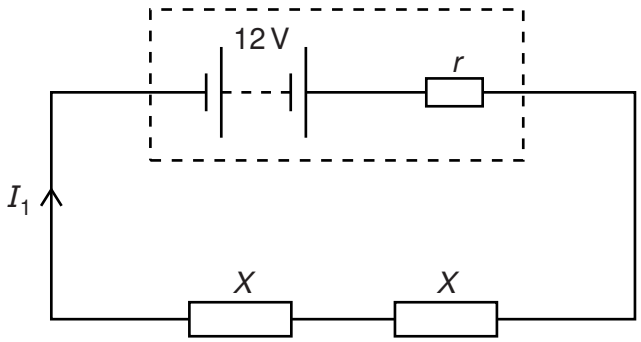

Fig. 5.1

The current I_1 supplied by the battery is 1.2 A.

The same battery is now connected to the same two resistors in parallel, as shown in Fig. 5.2.

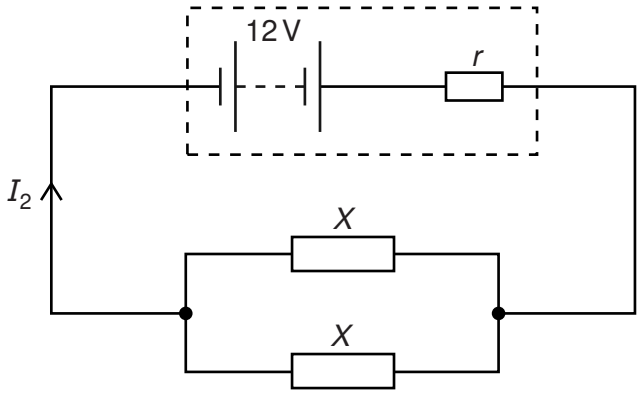

Fig. 5.2

The current I_2 supplied by the battery is 3.0 A.

(a) (i) Show that the combined resistance of the two resistors, each of resistance *X*, is four times greater in Fig. 5.1 than in Fig. 5.2.

[2]

(ii) Explain why I_2 is not four times greater than I_1.

.....

.....

.....[2]

© UCLES 2014

(iii) Using Kirchhoff's second law, state equations, in terms of e.m.f., current, X and r, for

1. the circuit of Fig. 5.1,

.....

2. the circuit of Fig. 5.2.

.....
[2]

(iv) Use the equations in **(iii)** to calculate the resistance X.

X = ...Ω [1]

(b) Calculate the ratio

$$\frac{\text{power transformed in one resistor of resistance } X \text{ in Fig. 5.1}}{\text{power transformed in one resistor of resistance } X \text{ in Fig. 5.2}}.$$

ratio = ...[2]

(c) The resistors in Fig. 5.1 and Fig. 5.2 are replaced by identical 12V filament lamps.

Explain why the resistance of each lamp, when connected in series, is not the same as the resistance of each lamp when connected in parallel.

.....

.....

.....

.....[2]

6 **(a)** State one difference and one similarity between longitudinal and transverse waves.

difference: .....

.....

similarity: .....

.....

[2]

(b) A laser is placed in front of two slits as shown in Fig. 6.1.

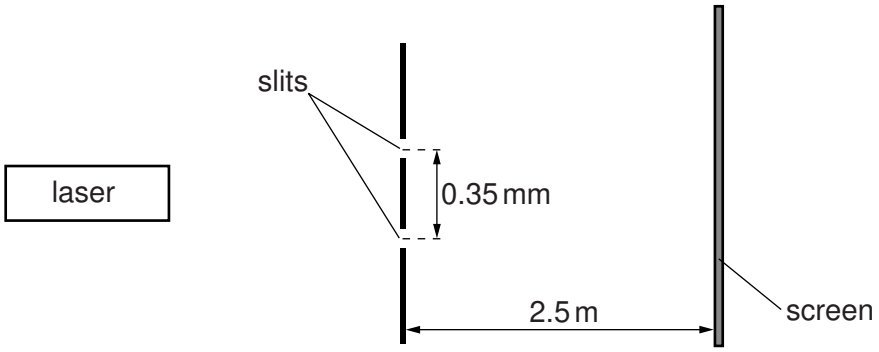

Fig. 6.1 (not to scale)

The laser emits light of wavelength 6.3×10^{-7} m.
The distance from the slits to the screen is 2.5 m. The separation of the slits is 0.35 mm.
An interference pattern of maxima and minima is observed on the screen.

(i) Explain why an interference pattern is observed on the screen.

.....

.....

.....

.....[2]

(ii) Calculate the distance between adjacent maxima.

distance = ...m [2]

(c) State and explain the effect, if any, on the distance between adjacent maxima when the laser is replaced by another laser emitting ultra-violet radiation.

.....

.....[1]

© UCLES 2014

7 In the decay of a nucleus of $^{210}_{84}Po$, an α-particle is emitted with energy 5.3 MeV.

The emission is represented by the nuclear equation

$$^{210}_{84}Po \rightarrow {}^{A}_{B}X + \alpha + \text{energy}$$

(a) (i) On Fig. 7.1, complete the number and name of the particle, or particles, represented by A and B in the nuclear equation.

	number	name of particle or particles
A		
B		

Fig. 7.1

[1]

(ii) State the form of energy given to the α-particle in the decay of $^{210}_{84}Po$.

.....[1]

(b) A sample of polonium $^{210}_{84}Po$ emits 7.1×10^{18} α-particles in one day.

Calculate the mean power output from the energy of the α-particles.

power = ... W [2]

© UCLES 2014

BLANK PAGE

Permission to reproduce items where third-party owned material protected by copyright is included has been sought and cleared where possible. Every reasonable effort has been made by the publisher (UCLES) to trace copyright holders, but if any items requiring clearance have unwittingly been included, the publisher will be pleased to make amends at the earliest possible opportunity.

Cambridge International Examinations is part of the Cambridge Assessment Group. Cambridge Assessment is the brand name of University of Cambridge Local Examinations Syndicate (UCLES), which is itself a department of the University of Cambridge.

© UCLES 2014